Ordering number : EN4867A

Thick Film Hybrid IC

STK6712BMK4

Unipolar Fixed-Current Chopper-Type 4-Phase Stepping Motor Driver

Overview

The STK6712BMK4 is a unipolar fixed-current chopper-type 4-phase stepping motor driver hybrid IC (HIC) which uses a MOSFET power device. The excitation sequence signal is active low.

Applications

- Serial printer, line printer, and laser beam printer (LBP) paper feed and carriage motor drivers
- PPC scanner and LBP paper feed drivers
- XY plotter pen drivers
- Industrial robot applications, etc.

Features

- This IC has the features of the STK6712BMK3, plus a simultaneous input prevention circuit that protects the IC from any malfunction of the excitation signal.
- Self-excitation design means chopping frequency is determined by motor L and R. Supports chopping at 20 kHz or higher.
- Very low number of external components required.
- Wide operating supply voltage range ($V_{CC}1$ = 18 to 42V)
- Excitation sequence signal is active low, and is TTL level for direct interfacing to the microcomputer and gate array.
- The unipolar design enables use as a driver for hybrid, PW, or VR type stepping motors.
- Supports W1-2 phase operation, with a dual Vref pin.

Package Dimensions

unit: mm

4129

[STK6712BMK4]

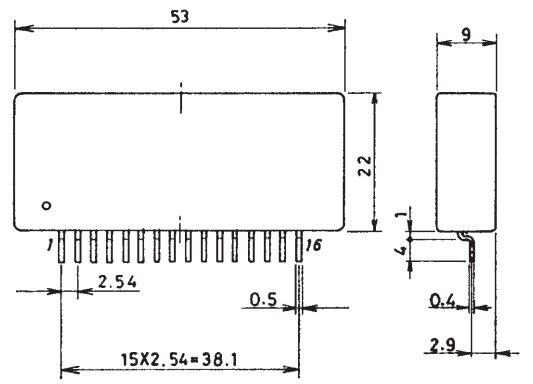

Specifications

Maximum Ratings at Ta = 25°C

Parameter	Symbol	Conditions	Ratings	Unit
Maximum supply voltage 1	$V_{CC}1$ max	No input signal	52	V
Maximum supply voltage 2	$V_{CC}2$ max	No input signal	7	V
Maximum phase current	I_{OH} max	per phase, R/L = 5 Ω, 10 mH, 0.5 s 1 pulse, V_{CC} input	2.5	A
Substrate temperature	Tc max		105	°C
Junction temperature	Tj max		150	°C
Storage temperature	Tstg		–40 to +125	°C
Repeated avalanche resistance	Ear max		38	mJ

Allowable Operating Ranges at Ta = 25°C

Parameter	Symbol	Conditions	Ratings	Unit
Supply voltage 1	$V_{CC}1$	With input signal	18 to 42	V
Supply voltage 2	$V_{CC}2$	With input signal	4.75 to 5.25	V
Phase driver voltage resistance	V_{DSS}		(min) 120	V
Phase current	I_{OH} max	Duty 50%	(max) 1.7	A

Junction Thermal Resistance

Parameter	Symbol	Conditions	Ratings	Unit
Power FET	θj-c		13.5	°C/W

Electrical Characteristics at Tc = 25°C, $V_{CC}1$ = 36 V, $V_{CC}2$ = 5 V

Parameter	Symbol	Conditions	min	typ	max	Unit
Output saturation voltage	V_{ST}	R_L = 23 Ω, V_{IN} = 0.8 V		1.1	1.5	V
Output current (average)	Io ave	R/L = 3.5 Ω/3.8 mH, V_{IN} = 0.8 V per phase	0.45	0.50	0.55	A
Pin current dissipation (average)	$I_{CC}2$	Load, R = 3.5 Ω, L = 3.8 mH, V_{IN} = 0.8 V per phase		15	25	mA
FET diode voltage	Vdf	Idf = 1.0 A		1.2	1.8	V
TTL input ON voltage	V_{IH}	Input voltage when F1, 2, 3, 4 ON	2.0			V
TTL input OFF voltage	V_{IL}	Input voltage when F1, 2, 3, 4 OFF			0.8	V
Switching time	t_{ON}	R_L = 24 Ω, V_{IN} = 0.8 V		100		ns
	t_{OFF}	R_L = 24 Ω, V_{IN} = 0.8 V		0.2		µs

Note: With constant voltage power supply.

Internal Equivalent Circuit

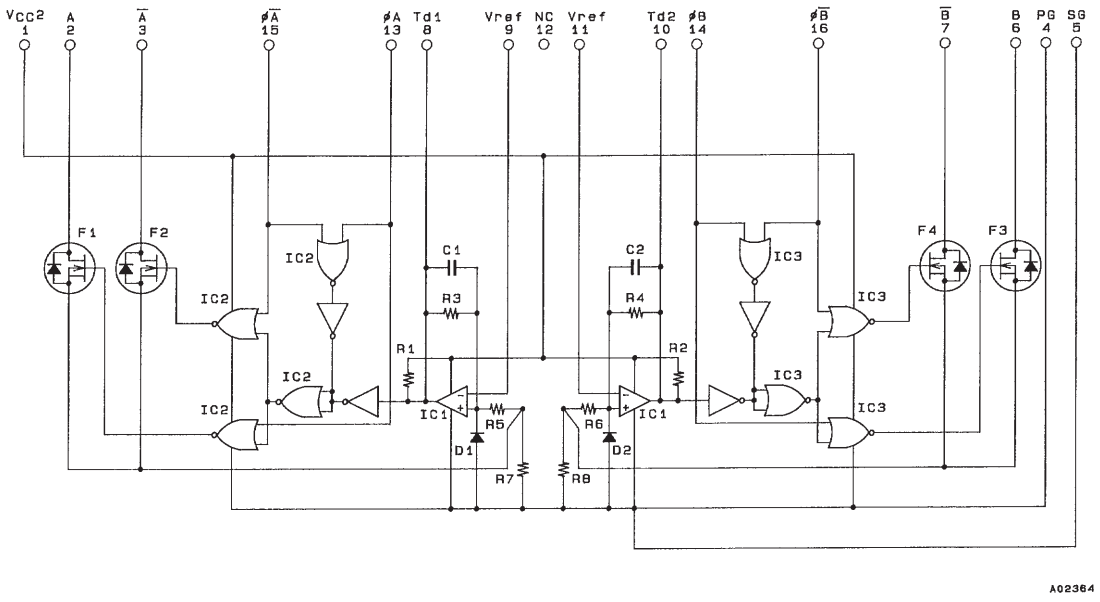

Sample Application Circuit

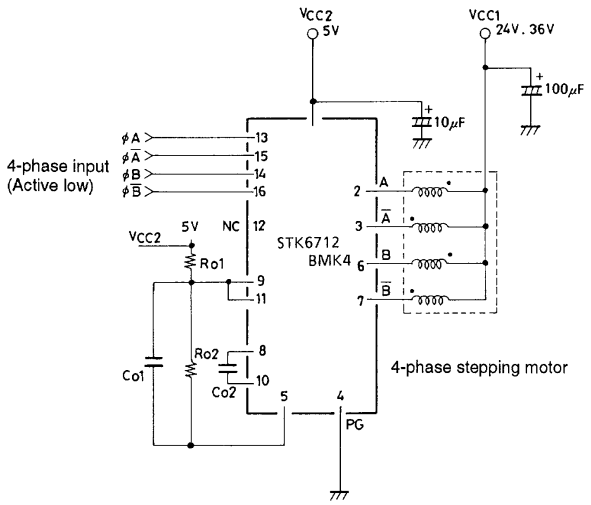

Output current waveform when phases are held (locked)

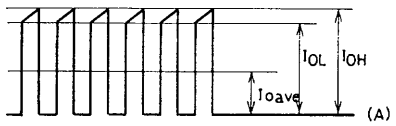

Measure output current values in this state.

Note: For reference, when $I_{OH} \approx 1.1$ A, $R_O1 = 6.8$ kΩ and $R_O2 = 390$ Ω.

$$I_{OH} = K \times \frac{R_O2}{R_O1 + R_O2} \times V_{CC}2/R_7$$

$K \approx 1.3$

$R7 = R8 \approx 0.33\ \Omega \pm 3\%$

To reduce noise during motor hold, it is possible to mount $C_O1 \approx 0.01$ μF and $C_O2 = 100$-200 pF. Normally these are not required.

STK6712BMK4 Circuit Operation

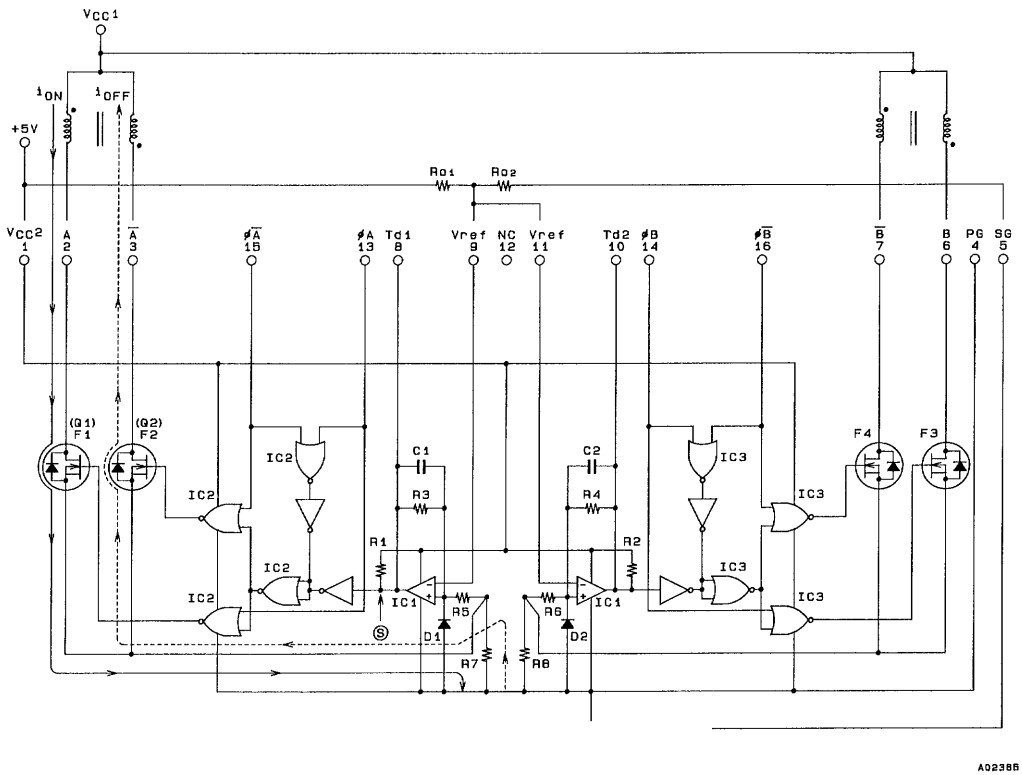

Fig. 1 STK6712BMK4 Internal Equivalent Circuit

The operation for a 4-phase dual-excitation example is described below.
The STK6712BMK4 equivalent circuit is given in Fig. 1. The circuit consists of the phase drivers, the comparator, the PWM excitation select and the current detect resistance. In Fig. 1 øA is input with low, and ø$\overline{A}$ with high. When Q1 goes on, the +pin of IC1 (comparator) goes low, making IC1 output Ⓢ low also. A winding current i_{ON} through Q1 increases as:

$$i_{ON} = \frac{V_{CC}1 - V_{SAT}}{R}\left(1 - e^{-\frac{R}{L}t}\right) \quad (1)$$

L: motor winding inductance
R: Sum of winding resistance and current detect resistance

For this reason, pin voltage V_{R7} at source resistor R7 increases, and when the $V_{RO}2$ voltages of pin 8 and R_O2 are equal output A goes high, and Q1 turns off. The inverse voltage V_{TP} is as:

$$V_{TP} = Vref = \frac{R_O2}{R_O1 + R_O2} \times V_{CC}2 \quad (2)$$

In general stepping motor coils use BIFALAR windings, so the energy stored in L1 is generated by L2, at which time the current in L2 is i_{OFF}. i_{OFF} conduction continues until the charges of capacitors C1 and C2 on R3 and R4 pins (E_C) equal V_{RO2}. When they are equal, output Ⓢ inverts and becomes low. Motor winding current i_{ON} again rises to V_{RO2} level. This motor current on/off (constant current chopping) is repeated. This waveform is illustrated on the next page.

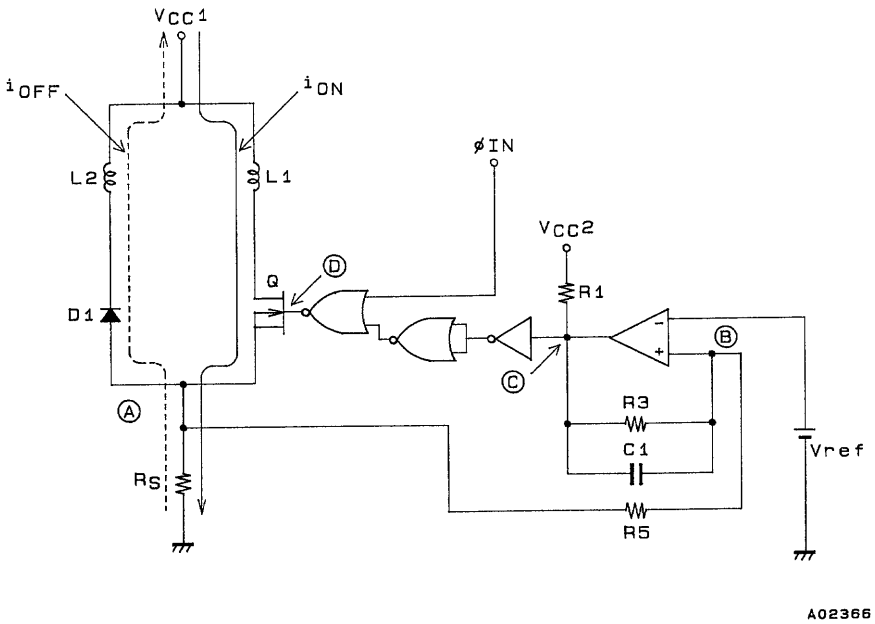

STK6712BMK4 Basic Circuit

Waveform Timing Charts

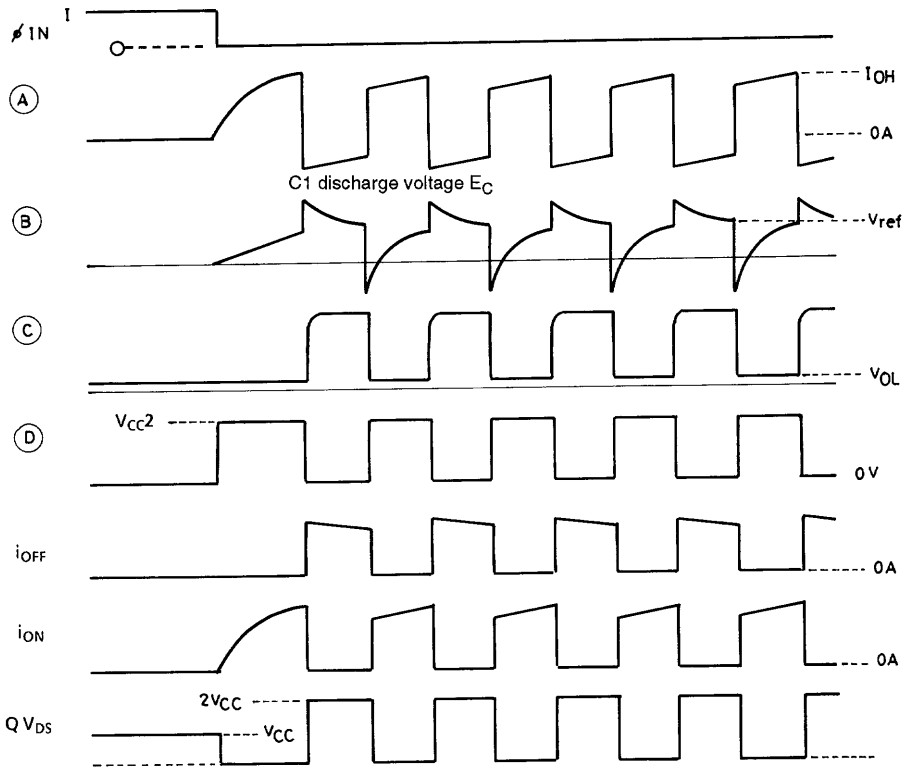

Fig. 2

Control Logic Timing Chart

1. 2-phase excitation

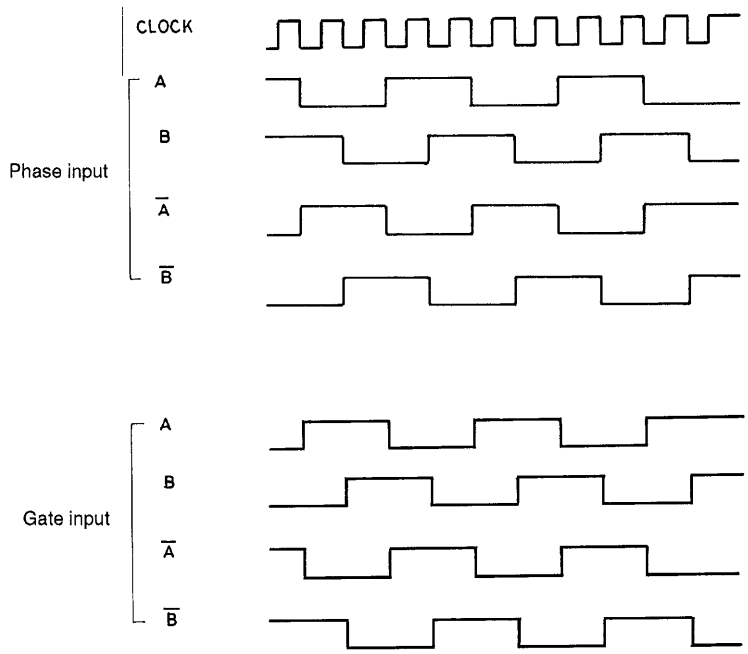

2. 1-2 phase excitation

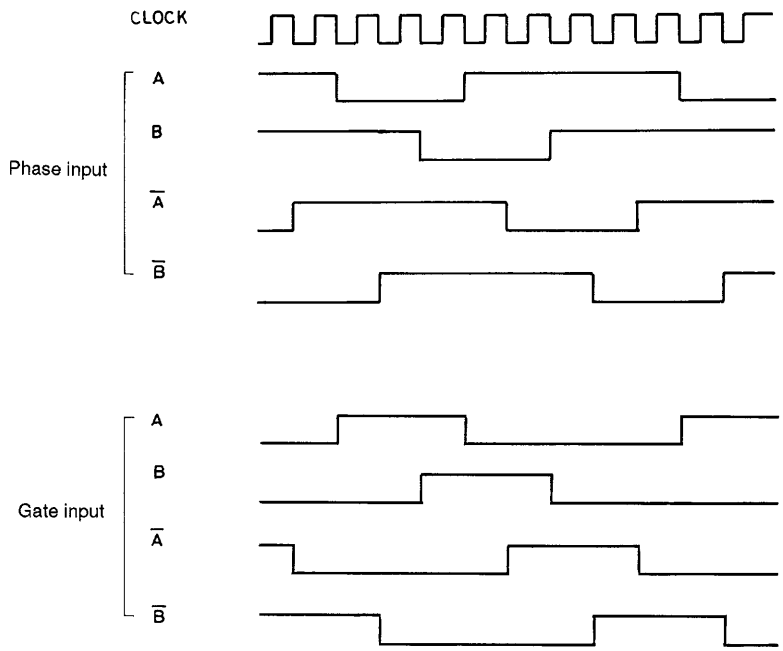

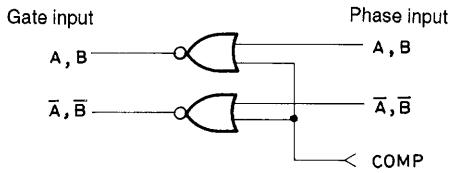

STK6712BMK4 Excitation Circuit

Setting Output Current

The motor output current waveform is shown to the right.
Output current I_{OH} can be set by the user by adjusting the voltage of pin 9 (11).
The computation equation is indicated below.

$$Vref = \frac{R_O2}{R_O1 + R_O2} \times V_{CC}2 \quad \text{.....(3)}$$

$$I_{OH} \approx K \times \frac{Vref}{R_S} \quad \text{.....(4)}$$

R_S: Internal current detect resistance (0.33 ± 3%)
K: 1.1 to 1.2 (correction for actual measurement)

Power down can be accomplished by reducing the synthetic impedance by connecting a resistance in parallel to R_O2.
The motor output current variation range can be set for the range of:

I_{OH} = 0.2 A to 1.7 A

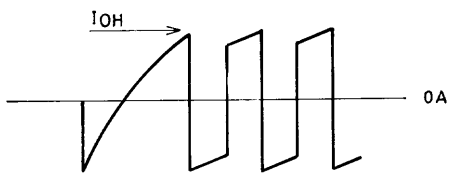

Fig. 3 Output Motor Current Waveform

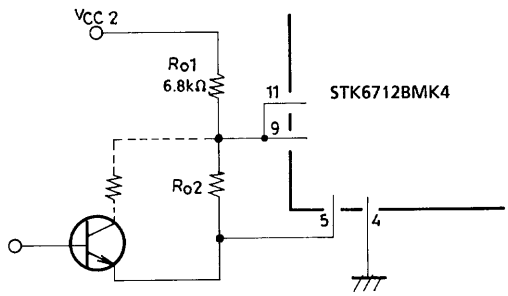

Fig. 4 Vref Peripheral Circuit

but when set to I_{OH} = 0.2 A or lower note that the HIC GND pattern will be one-point earth with respect to the power supply. If earth is poor, there may be no motor current when I_{OH} = 0.2 A. We recommend a motor inductance usage range of L = 1 mH to 10 mH.

Determining Chopping Frequency

The STK6713BMK4 uses constant current for self-excitation.
The I_{OH} t_{OFF} time is set to about 14 µs, and the t_{ON} time can be expressed as:

$$t_{ON} \approx \frac{L}{R + 0.88} \ln \left(\frac{V_{CC} - \left(I_{OH} e^{-\frac{R}{L} t_{OFF}} - \frac{V_{CC} + 0.88}{R} \left(1 - e^{-\frac{R}{L} t_{OFF}}\right)\right)(R + 0.88)}{V_{CC} - (R + 0.88) I_{OH}} \right) \quad \text{..... (5)}$$

L: Motor winding inductance
R: Motor resistance
V_{CC}: Motor supply voltage
I_{OH}: Output current

As a result, the chopping frequency is

$$F \approx \frac{1}{t_{ON} + t_{OFF}} = \frac{1}{t_{ON} + 14 \times 10^{-6}} \text{ (Hz)} \quad \text{..... (6)}$$

However, note that when the following conditions exist the value for F will change.

$$14 \times 10^{-6} \geq \frac{-L}{R} \ln \left(\frac{V_{CC} + 0.88}{I_{OH} \times R + V_{CC} + 0.88} \right) = t_{OFF}2 \quad \text{..... (7)}$$

$$t_{OFF} \approx t_{OFF}1 + t_{OFF}2 = 14 \times 10^{-6} + t_{OFF}$$

$$\therefore F = \frac{1}{t_{ON} + 14 \times 10^{-6} + t_{OFF}2} \text{ (Hz)} \quad \text{..... (8)}$$

Because the STK6712BMK4 is self-exciting there will be minor variation in motor inductance during motor revolution. Final design verification is required in an actual model.

Thermal Radiation Design

The HIC radiator plate size is dependent on the motor output current I_{OH} (A), motor electrical characteristics, excitation mode, and excitation input signal clock frequency fclock (Hz).

The thermal resistance for the radiator can be determined from the following expression.

$$\theta c - a = \frac{Tc\ max - Ta}{Pd} \text{ (°C/W)} \quad \text{..... (9)}$$

Tc max = HIC substrate temperature (°C)
Ta = set internal temperature (°C)
Pd = HIC internal mean power dissipation (W)

With a 2.00 mm aluminum radiation plate, the required area can be determined from Fig. 6. Note that substrate temperature will vary widely with set internal air temperature, and therefore the rear side of the HIC (the aluminum plate side) must always be kept below the maximum temperature of 105°C.

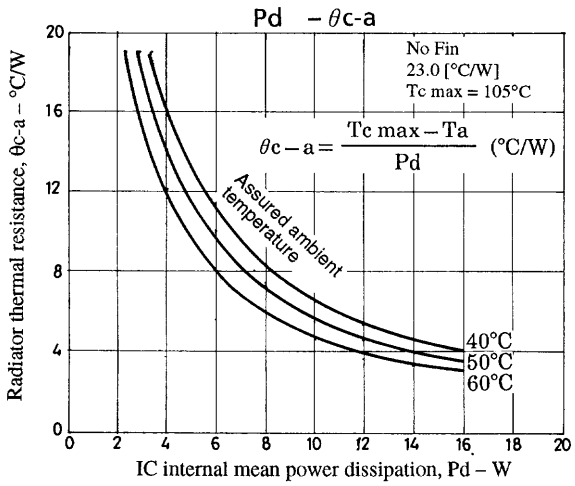

Fig. 5

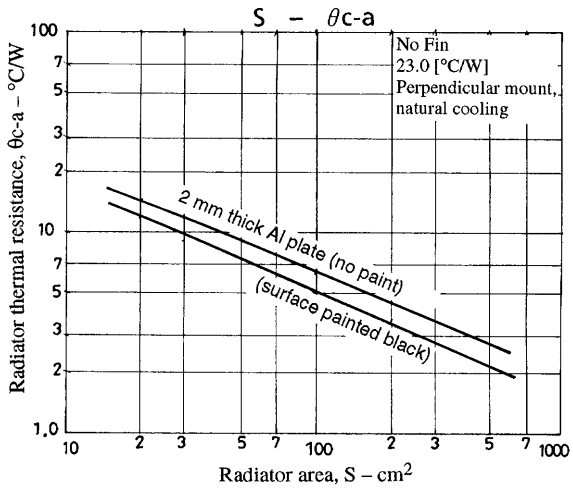

Fig. 6

HIC Internal Mean Power Dissipation Pd

The internal mean power dissipation of the STK6712BMK4 is primarily due to the current control device, the regenerating current diode, the current detect resistance and the predriver circuit.

Loss in each excitation mode is:

2 phase excitation $$Pd2_{EX} \approx (Vst + Vdf)\ \frac{fclock}{2}\ I_{OH}t2 + \frac{fclock}{2}\ I_{OH}\ (Vst \times t1 + Vdf \times t3) \quad \text{..... (10)}$$

1-2 phase excitation $$Pd1-2_{EX} \approx (Vst + Vdf)\ \frac{3I_{OH}t2}{8}\ fclock + \frac{3I_{OH}}{3}\ fclock\ (Vst \times t1 + Vdf \times t3) \quad \text{..... (11)}$$

Vst: R_{ON} voltage drop + R7 (R8) output voltage
Vdf: FET internal diode + R7 (R8) output voltage
fclock: Input clock (reference frequency before frequency divider)

t1, t2 and t3 are the time modes for the waveform indicated below.

t1: Time for winding current to rise to set current
t2: Time for constant current chopping region
t3: Time from end of phase input signal until inverse current regeneration is complete.

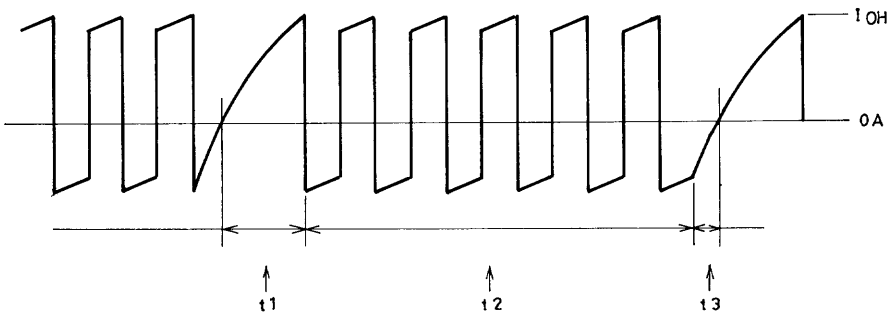

Fig. 7 Motor Output Current Waveform (model)

$$t1 \approx \frac{-L}{R + 0.88} \ \text{In}\left(1 - \frac{R + 0.88}{V_{CC}} \times I_{OH}\right) \quad (12)$$

$$t3 \approx \frac{-L}{R} \ \text{In}\left(\frac{V_{CC} + 0.88}{I_{OH} \cdot R + V_{CC} + 0.88}\right) \quad (13)$$

V_{CC} : Motor supply voltage (V)
L : Motor inductance (H)
R : Motor internal resistance (Ω)
I_{OH} : Motor output current peak (A)

The chopping frequency F and t2 for each excitation mode are:

2 phase excitation F = fclock/2, t2 = (1/F) – (t1 + t3) ..... (14)

1-2 phase excitation F = 3fclock/8, t2 = (1/F) – t1 ..... (15)

fclock: 4-phase divider input oscillation frequency

The characteristic diagrams (typ) for I_{OH} and Vst, and I_{OH} and Vdf are given in Figs. 8 and 9.

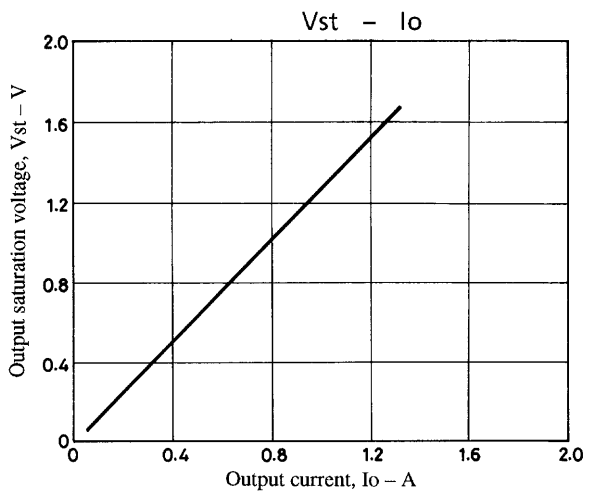

Fig. 8

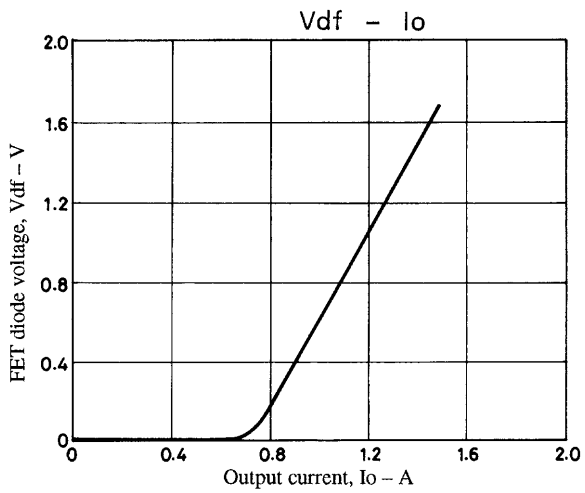

Fig. 9

STK6712BMK4 No Thermal Radiation Range (example)

An example of STK6712BMK4 use in the no-fin state is indicated below.

Conditions:

- Motor supply voltage $V_{CC}1$ = 30 V, stepping motor: Electrical characteristics 3.5 mH/ø, 3.5 Ω/ø
- Excitation: 2-phase
- Input clock frequency 500 Hz = fclock
- HIC ambient temperature Ta = 25°C, natural convection
- HIC rear substrate temperature Tc = 105°C saturation
- Motor output current I_{OH} = 1.4 A

At this time, the HIC permissible loss can be calculated as:

$$\text{Maximum loss: Pd max} = \frac{Tc\ max - Ta}{\theta c - a} = \frac{105 - 25}{23} = 3.4\ (W) \quad (16)$$

From these conditions and expressions (12), (13) and (14):

t1 = 0.183 ms
t2 = 3.670 ms
t3 = 0.147 ms

Referring to Figs. 8 and 9, each value for Vst and Vdf is determined by expression (10) as follows :

$$Pd2_{EX} = (Vst + Vdf)\ \frac{fclock}{2}\ I_{OH}t2 + \frac{fclock}{2}\ I_{OH}\ (Vst \times t1 + Vdf \times t3) \quad \text{..... (17)}$$

$$= 3.08 + 0.14 = 3.22\ (W)$$

From expression (9), Tc is calculated as:

$$Tc = Pd2_{EX} \times \theta c - a + Ta = 3.22 \times 23 + 25 \approx 99.1\ (°C) \quad \text{..... (18)}$$

This is only one example, and because convection and other air movements around the HIC will not match mathematical modelling verification with an actual model is essential.

Motor hold noise countermeasures

The STK6712BMK4 executes constant current chopping outside the audible range. During motor hold the current hold is outside the range of audible frequencies, but for motors of sizes 30 to 40 mm square (when seen from the shaft direction) with inductance of about 15 mH, there are cases where the output noise is converted to low-frequency noise. In this case, addition of the following components will essentially eliminate such audible noise.

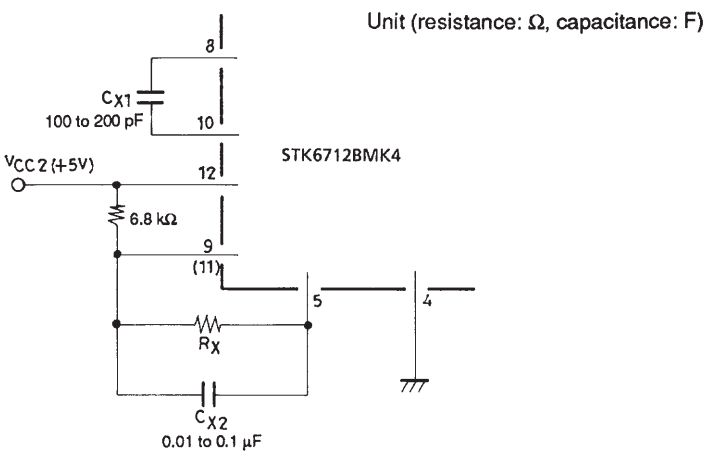

Fig. 10 Motor Hold Noise Countermeasure

■ No products described or contained herein are intended for use in surgical implants, life-support systems, aerospace equipment, nuclear power control systems, vehicles, disaster/crime-prevention equipment and the like, the failure of which may directly or indirectly cause injury, death or property loss.

■ Anyone purchasing any products described or contained herein for an above-mentioned use shall:
① Accept full responsibility and indemnify and defend SANYO ELECTRIC CO., LTD., its affiliates, subsidiaries and distributors and all their officers and employees, jointly and severally, against any and all claims and litigation and all damages, cost and expenses associated with such use:
② Not impose any responsibility for any fault or negligence which may be cited in any such claim or litigation on SANYO ELECTRIC CO., LTD., its affiliates, subsidiaries and distributors or any of their officers and employees jointly or severally.

■ Information (including circuit diagrams and circuit parameters) herein is for example only; it is not guaranteed for volume production. SANYO believes information herein is accurate and reliable, but no guarantees are made or implied regarding its use or any infringements of intellectual property rights or other rights of third parties.

This catalog provides information as of October, 1995. Specifications and information herein are subject to change without notice.